Voltage and Current Parameters

❑ High-State Gate as Driver for a Second Gate

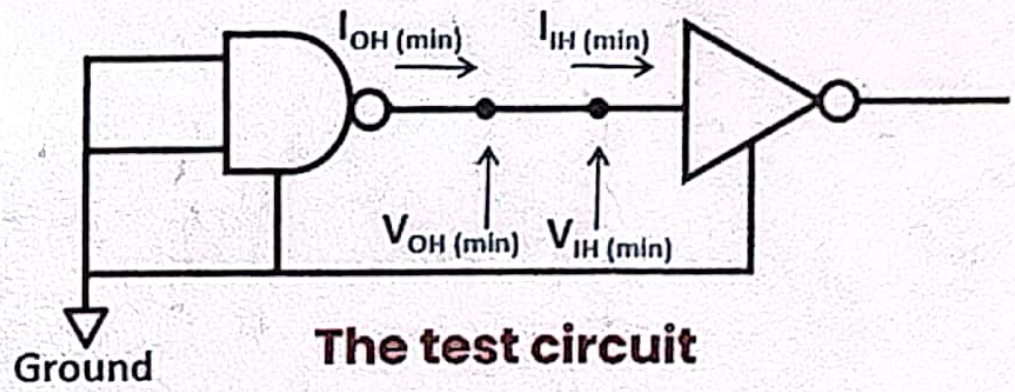

The test circuit

- $V_{OH(min)}$ – (High-level output voltage); The minimum output voltage level corresponding to the logic 1
- $V_{IH(min)}$ – (High-level input voltage); The minimum input voltage level corresponding to the logic 1
- $I_{OH\ (min)}$ – (High level output current); The current that flows from an output in the logic 1 state under specified load conditions.
- $I_{IH\ (min)}$ – (High level input current); The current that flows into an input when a logic 1 voltage is applied to that input

CamScanner

Voltage and Current Parameters

❑ Low-State Gate as Driver for a Second Gate

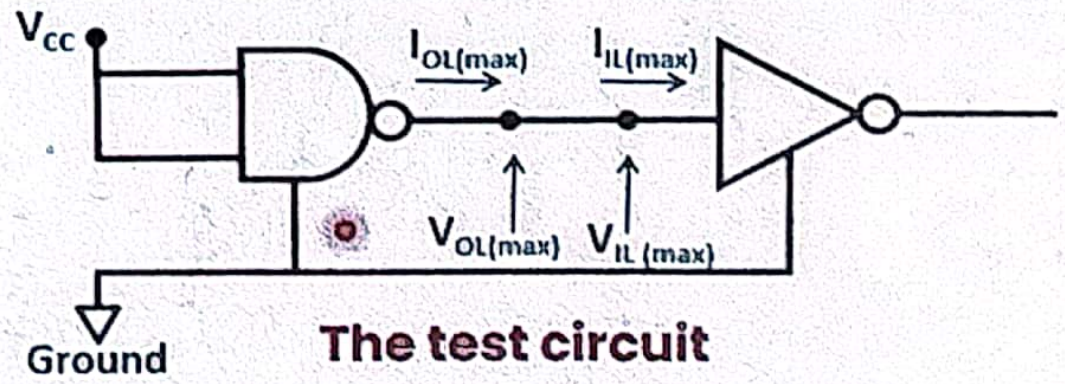

The test circuit

- $V_{OL(max)}$ – (Low-level output voltage); The maximum output voltage level corresponding to the logic 0
- $V_{IL(max)}$ – (Low-level input voltage); The maximum input voltage level corresponding to the logic 0
- $I_{OL(max)}$ – (Low level output current); The current that flows from an output in the logic 0 state under specified load conditions.
- $I_{IL(max)}$ – (Low level input current); The current that flows into an input when a logic 0 voltage is applied to that input.

CamScanner

Noise Immunity (Noise Margin)

- The noise immunity of a logic circuit is its ability to handle noise voltages on inputs. The numerical measure for this is called the noise margin. A higher noise margin ensures stability and integrity in the logic circuit, under the presence of external disturbances.

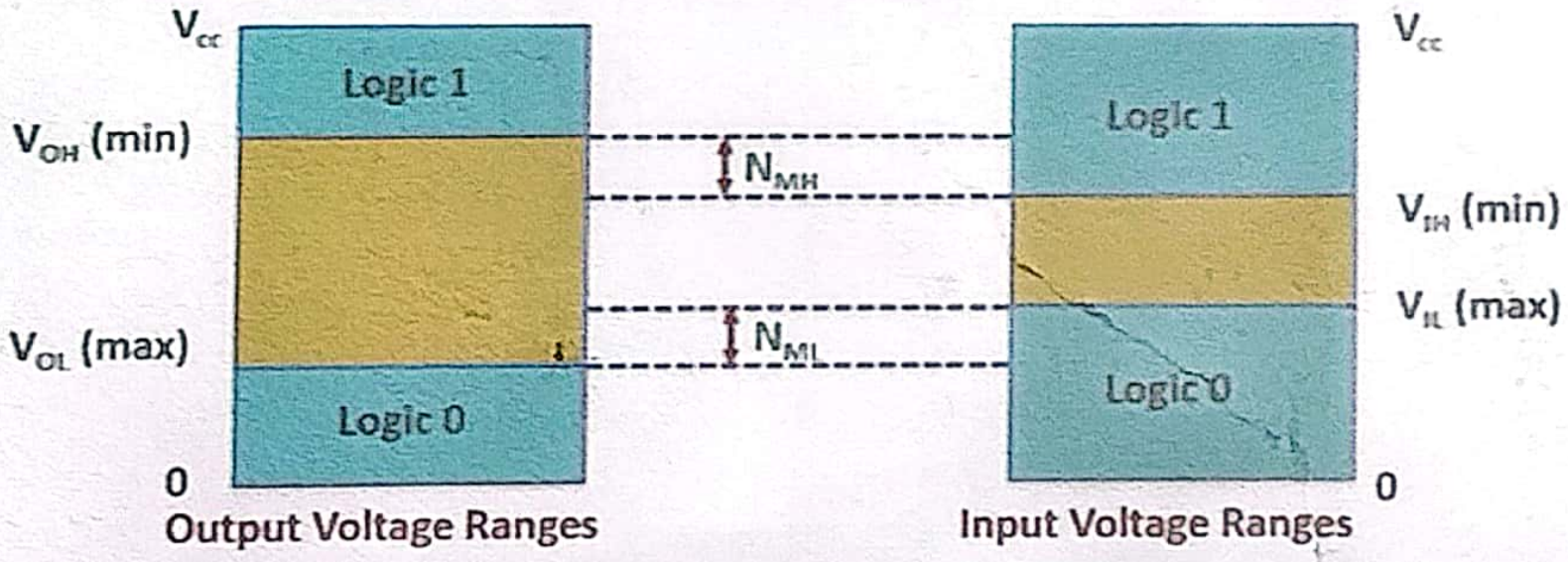

- Noise immunity for logic high → $N_{MH} = V_{OH}(\min) - V_{IH}(\min)$
- Noise immunity for logic low → $N_{ML} = V_{IL}(\max) - V_{OL}(\max)$

CamScanner

Classification of Logic Families

- Logic families are identified by the manner in which the elements are connected, and, in some cases, by the types of elements used.
- Examples - Resistor Transistor Logic (RTL), Diode Transistor Logic (DTL), Transistor-Transistor logic (TTL), High Threshold Logic (HTL), Direct Coupled Transistor Logic (DCTL).

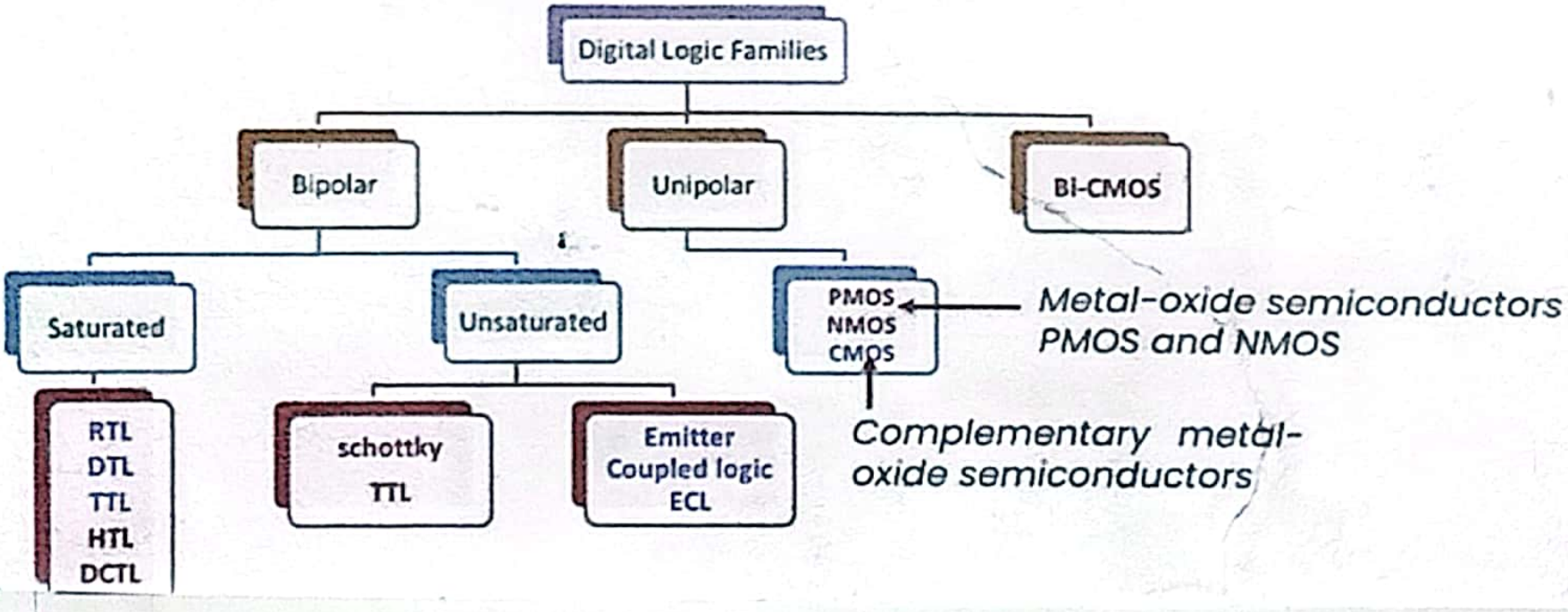

CamScanner

Resistor Transistor Logic (RTL)

❑ Transistor as a switch

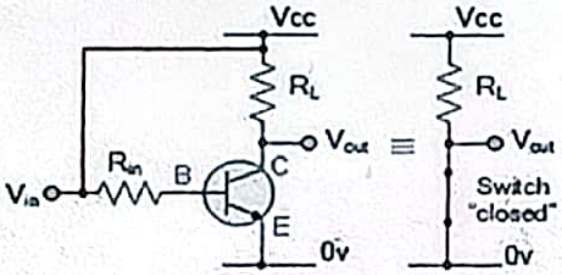

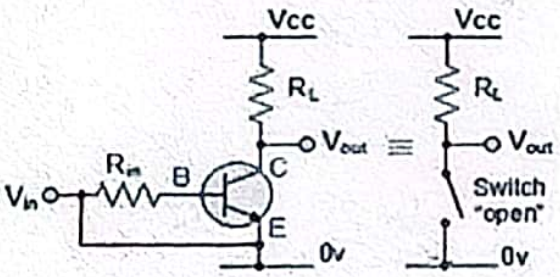

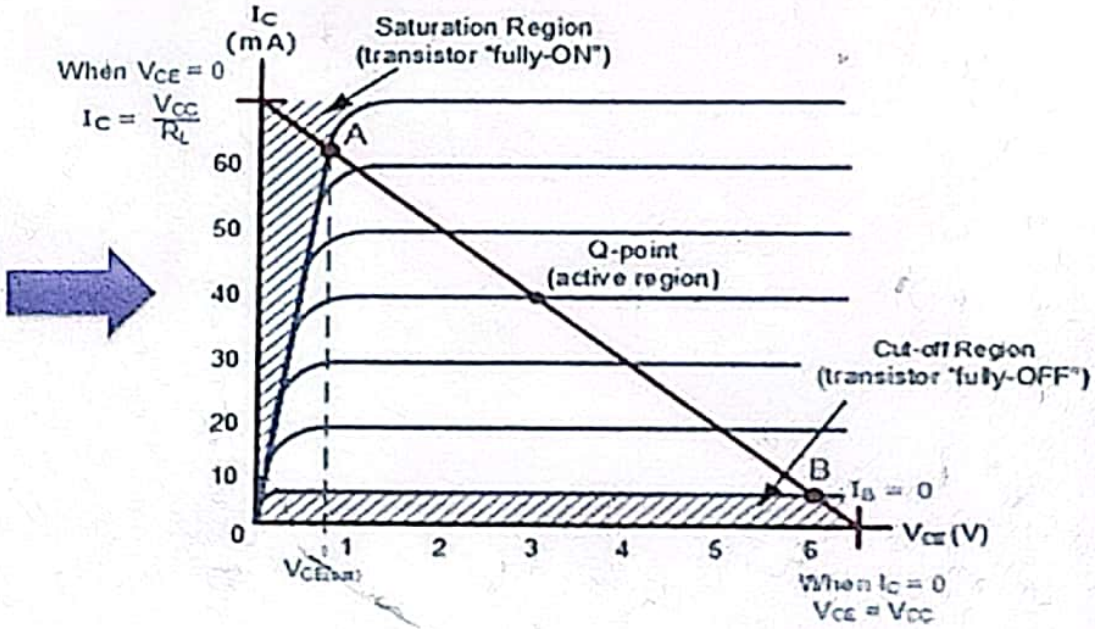

CamScanner